ORSEAL

the valve specialists

WRAS approved brass nickel plated ball valve ORWBV

-10 - +100

25 Bar

WRAS APPROVED PRODUCT

Brass ball valves fully approved in the UK under Water Regulatory Advisory Scheme (WRAS).

Ideal for use with hot and cold domestic water applications, compressed air, oils, and hydrocarbons in general.

Female x Female BSPP Red Lever handle valves stocked as standard.

Material	Thread	End Connection	Temp	Max W.P
Brass NP	BSPP	F X F	-10 - +100	25 Bar

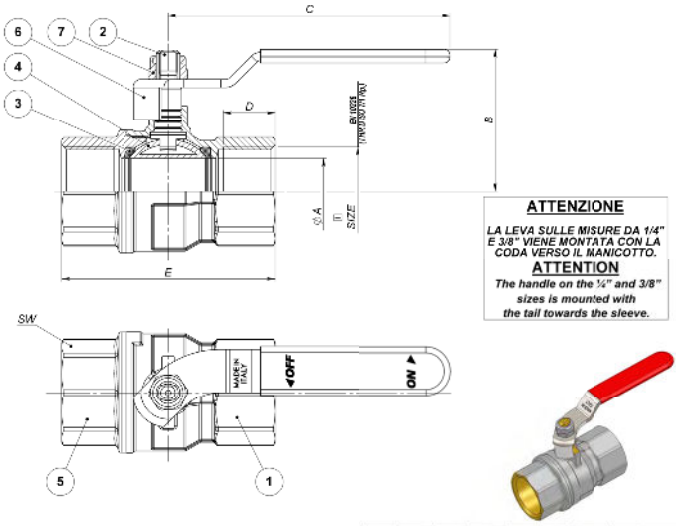

MISURA – SIZE	DN	ØA	B	C	D	E	F	G	H	I	L	M				SW	PN
2"	50	50	77.5	140	25.7	123.5										63	25
1"1/2	40	40	67.5	120	21.4	101										53	25
1"1/4	32	32	59	105	21.4	91.5										48	25
1"	25	25	52	105	19.1	80										37	25
3/4"	20	20	42	90	16.3	64										30	25
1/2"	15	15	40	75	15	56.5										24	25
3/8"	10	10	35.5	65	11.4	47										21	50
1/4"	8	8	34.5	65	11	44.5										17	50

Key features

- Full Bore
- Forged Brass Nickel-Plated Body
- Perfect Tightness at low and High Pressure
- Long life with no maintenance
- Maximum working pressure 25 Bar
- Suitable for hot and cold water -20°C – +100°C
- Female x Female BSPP
- Blowout proof stem
- RoHS 3 Compliant
- Manufactured in Italy

Item	Size	Unit Price
ORWBV-FF-1/4	1/4"	£2.88
ORWBV-FF-3/8	3/8"	£3.04
ORWBV-FF-1/2	1/2"	£2.56
ORWBV-FF-3/4	3/4"	£3.58
ORWBV-FF-1	1"	£5.90
ORWBV-FF-11/4	1" 1/4	£10.10
ORWBV-FF-11/2	1" 1/2	£15.07
ORWBV-FF-2	2"	£22.61

*Volume pricing support available upon request.

No	Description	Material	Q.ta
1	Body	CW617N (EGM.001)	1
2	Pre-assembled stem	Various	1
	Stem	CW614N (EGM.002)	2
	O-Ring	NBR (EGM.068)	2
	Thrust Washer	PTFE (EGM.009)	1
3	Ball Gasket	PTFE (EGM.069)	1
4	Ball	CW617N (EGM.001)	1
5	End-Adapter	CW617N (EGM.001)	1
6	Red Lever	Steel (EGM.007)	1
7	Self-Locking Nut	Steel (EGM.020)	1

CE

Gas Approved EN331

RoHS 3 COMPLIANT

Lynstock Way, Lostock, Bolton BL6 4QR
T: +44 (0) 1204 474300 / F: +44 (0) 1204 474347
E: orsealsales@orseal.com
www.orseal.com